CC

4700 U, 4700 S

Spare parts list

Hydraulic demolition cutter

	Valid from serial number
CC 4700 U	DEQ129303
CC 4700 S	DEQ129303

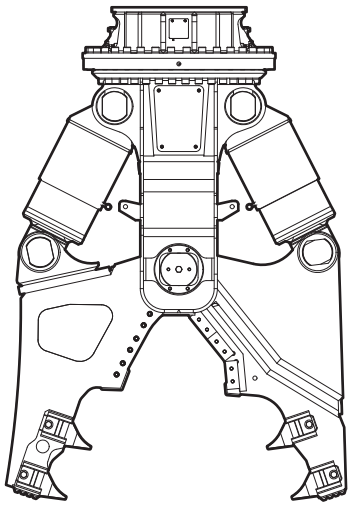

© 2013 Atlas Copco Construction Tools GmbH | No. 3390 7552 01 | 2013-04-05

Contents

General information 5

Spare parts list 6
- **Hydraulic demolition cutter** 6
- **Hydraulic cylinder** 8
- **Protective piston rod sheath** 10
- **Cutter jaw pair U complete** 12
- **Cutter jaw (single) U** 14
- **Cutter jaw (double) U** 16
- **Cutter jaw pair S complete** 18
- **Cutter jaw (single) S** 20
- **Cutter jaw (double) S** 22
- **Upper part complete** 24
- **Rotary transmission** 26

Tightening torques 28

Accessories 29
- **Hydraulic hoses** 29
- **Optional equipment** 29

Kits 30
- **Label kit** 30
- **Hoses (casing) kit** 30
- **Cutter blades kit U** 30
- **Cutter blades kit S** 31
- **Tip of tooth kit** 31
- **Sliding plate kit** 31
- **Seal kit (Hydraulic cylinder)** 32
- **Seal kit (Hydraulic motor housing)** 32
- **Seal kit (Hydraulic motor)** 32
- **Seal kit for rapid movement valve** 32

Dimensions 33
- **Dimensions CC 4700 U** 33
- **Dimensions CC 4700 S** 34

General information

This spare parts list applies to the following:

Part number	Description
3363 0971 01	Hydraulic demolition cutter CC 4700 U
3363 0971 03	Hydraulic demolition cutter CC 4700 S

Use only authorized parts. Any damage or malfunction caused by the use of unauthorized parts is not covered by Warranty or Product Liability.
Any unauthorized use or copying of the contents or any part thereof is prohibited. This applies in particular to trademarks, model denominations, part numbers, and drawings.

Instructions for use
This spare parts list contains no safety regulations and is merely intended to assist in the ordering of spare parts.
For information about operating, servicing, or repairing, the relevant Safety and operating instructions must be consulted at all costs.
Please observe the safety instructions listed in the relevant Safety and operating instructions!

Instructions of ordering
It is essential to indicate the serial number of the hydraulic attachment when ordering spare parts!
Determine the quantity of individual parts which are required and need to be ordered. The order must indicate the following details:

- full identification code of the hydraulic attachment
- required quantity
- part number
- description

Spare parts list

Hydraulic demolition cutter

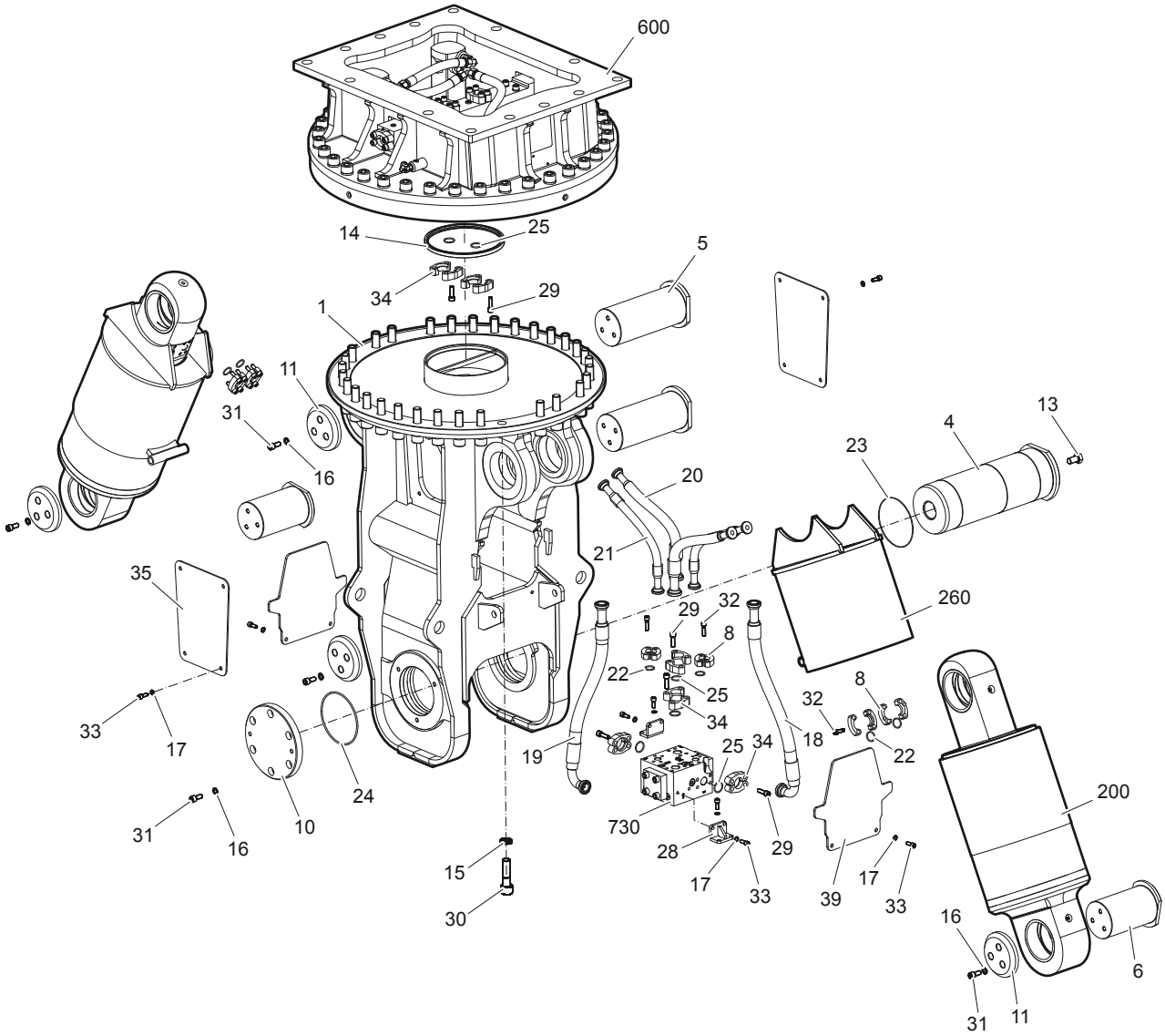

© 2013 Atlas Copco Construction Tools GmbH | No. 3390 7552 01 | 2013-04-05

No.	Description	Remark	Quantity	Part number
1	Housing		1	3363 0971 25
4	Bolt		1	3363 1099 39
5	Bolt		2	3363 1132 66
6	Bolt		2	3363 1132 65
8	Flange half		12	3361 8532 08
10	Cap		1	3363 1122 28
11	Cap		4	3363 1132 71
13	Hexagon head screw		1	3363 0910 95
14	Seal		1	3363 0700 83
15	Pair of lock washers		32	3361 8507 48
16	Pair of lock washers		15	3361 3337 03
17	Pair of lock washers		20	3361 8505 96
18	Hydraulic hose		1	3363 1099 33
19	Hydraulic hose		1	3363 1099 36
20	Hydraulic hose		2	3363 1099 32
21	Hydraulic hose		2	3363 1099 34
22	O-ring		6	3360 3143 70
23	O-ring		1	3361 0314 95
24	O-ring		1	3361 0319 51
25	O-ring		6	3360 3143 72
28	Holder		2	3363 1054 87
29	Allen screw		24	3363 0342 74
30	Allen screw		32	3360 1061 01
31	Allen screw		15	3360 0266 41
32	Allen screw		24	3360 0265 13
33	Allen screw		20	3360 1037 51
34	Flange half		12	3360 9924 88
35	Plate		2	3363 1063 38
39	Plate		2	3363 1122 20
200	Hydraulic cylinder complete	see separate chapter	2	3363 1152 36
260	Protective piston rod sheath complete	see separate chapter	2	3363 1152 35
600	Upper part complete	see separate chapter	1	3363 0971 07
730	Rapid movement valve		1	3363 0994 07

Hydraulic cylinder

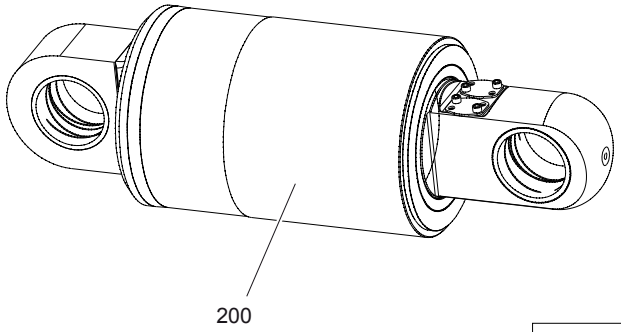

220							
221	222	223	224	225	226	227	228

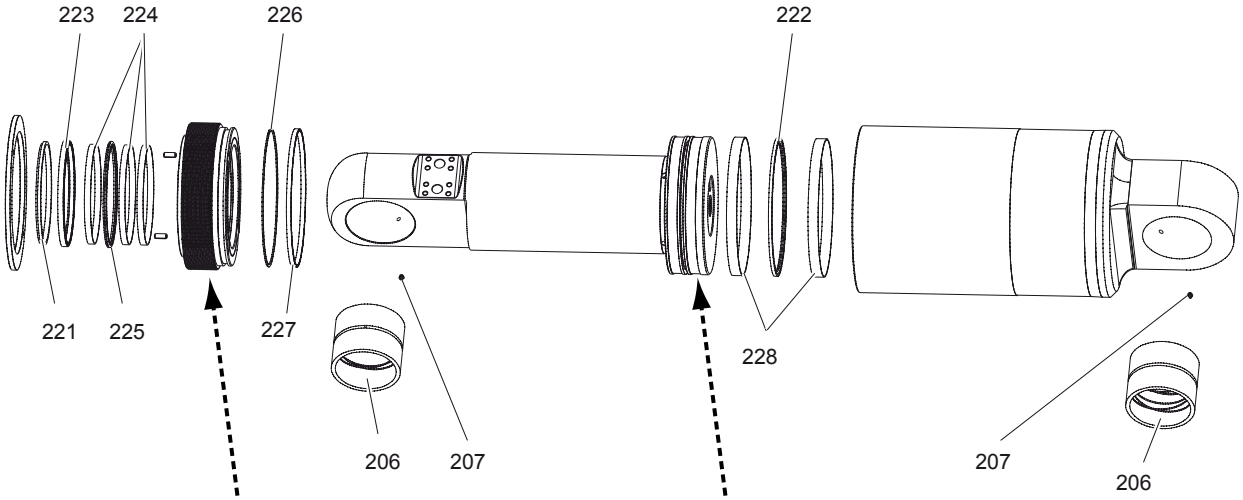

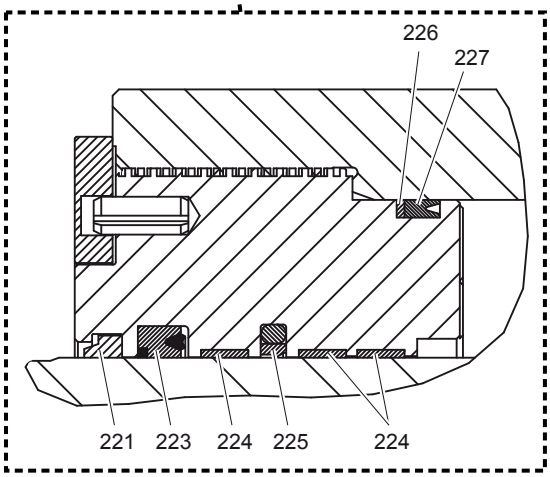

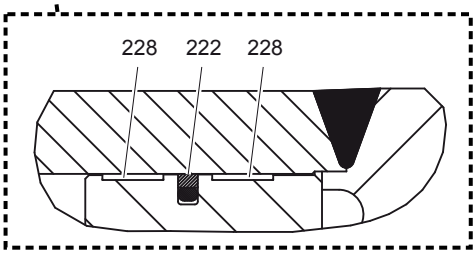

© 2013 Atlas Copco Construction Tools GmbH | No. 3390 7552 01 | 2013-04-05

No.	Description	Remark	Quantity	Part number
200	Hydraulic cylinder complete	with parts No. 206 to 228	1	3363 1152 36
206	Clamping bush		2	3363 1099 29
207	Grease nipple		2	3360 2098 34
220(221-228)	**Seal kit for hydraulic cylinder**		1	3363 1036 98
221	Wiper		1	-
222	Seal		1	-
223	Seal		1	-
224	Guide ring		3	-
225	Seal		1	-
226	Back-up ring		1	-
227	Seal		1	-
228	Guide ring		2	-

Protective piston rod sheath

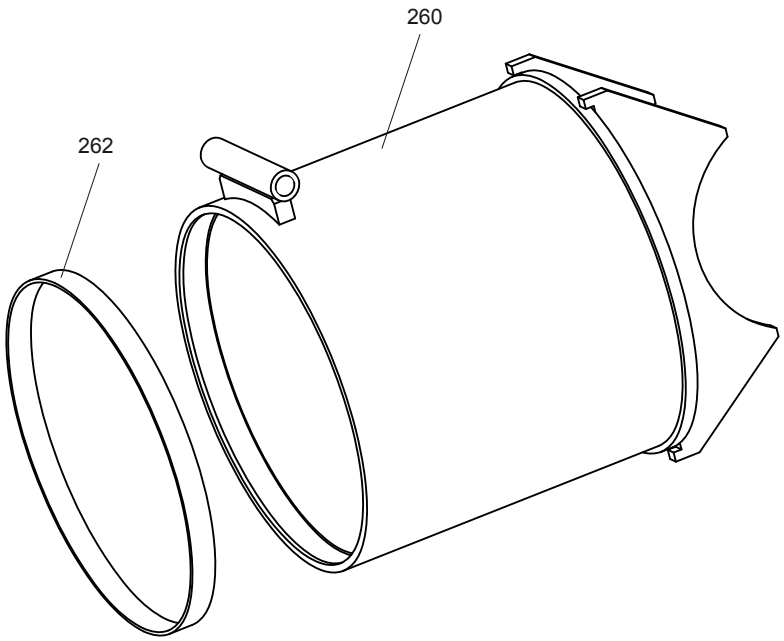

© 2013 Atlas Copco Construction Tools GmbH | No. 3390 7552 01 | 2013-04-05

No.	Description	Remark	Quantity	Part number
260	Protective piston rod sheath complete	with part no. 262	1	3363 1152 35
262	Guide strip		1	3363 1150 53

Cutter jaw pair U complete

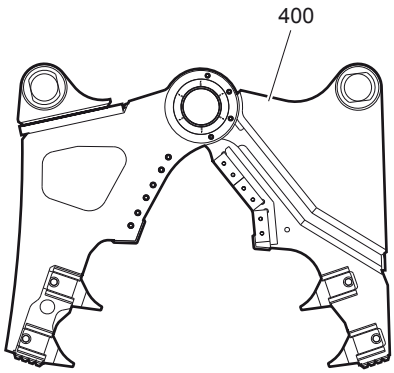

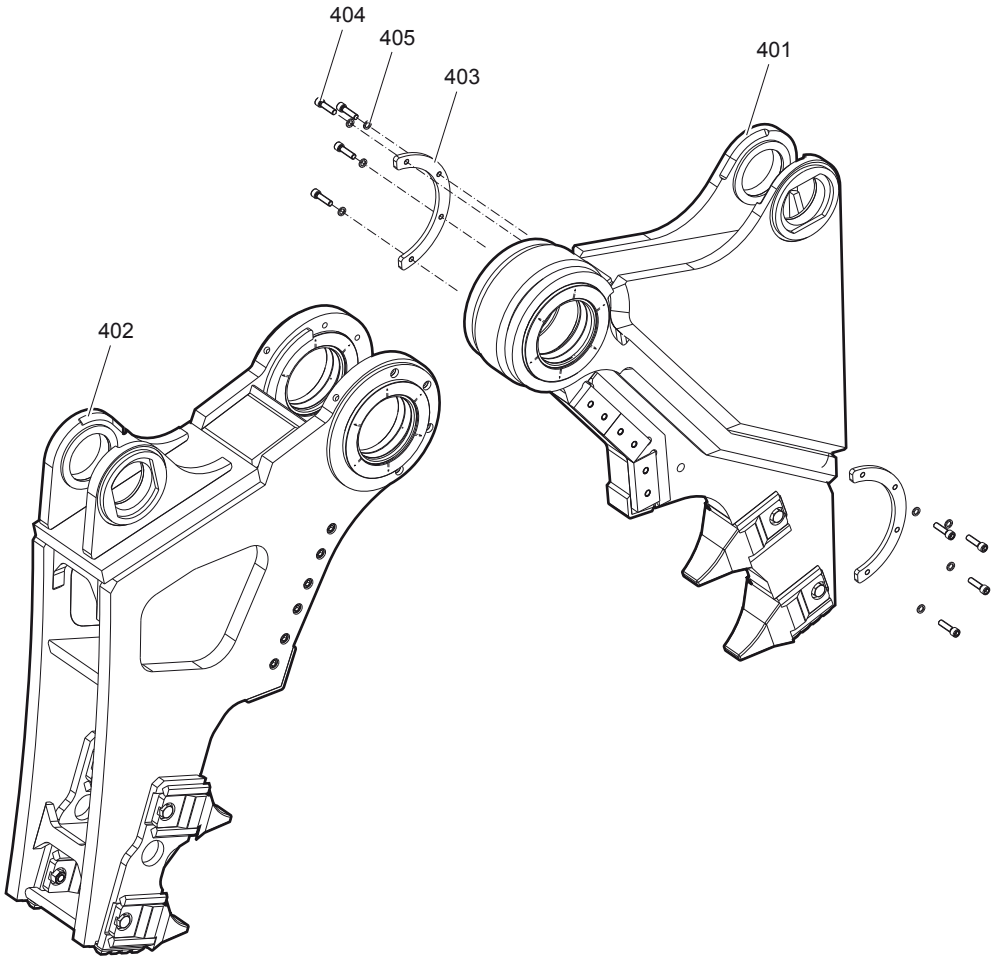

© 2013 Atlas Copco Construction Tools GmbH | No. 3390 7552 01 | 2013-04-05

No.	Description	Remark	Quantity	Part number
400	Cutter jaw pair U complete		1	3363 1063 37
401	Cutter jaw (single) U	see separate chapter	1	3363 1063 35
402	Cutter jaw (double) U	see separate chapter	1	3363 1063 36
403	Ring segment		2	3363 1099 59
404	Allen screw		8	3360 0266 42
405	Pair of lock washers		8	3361 3337 03

Cutter jaw (single) U

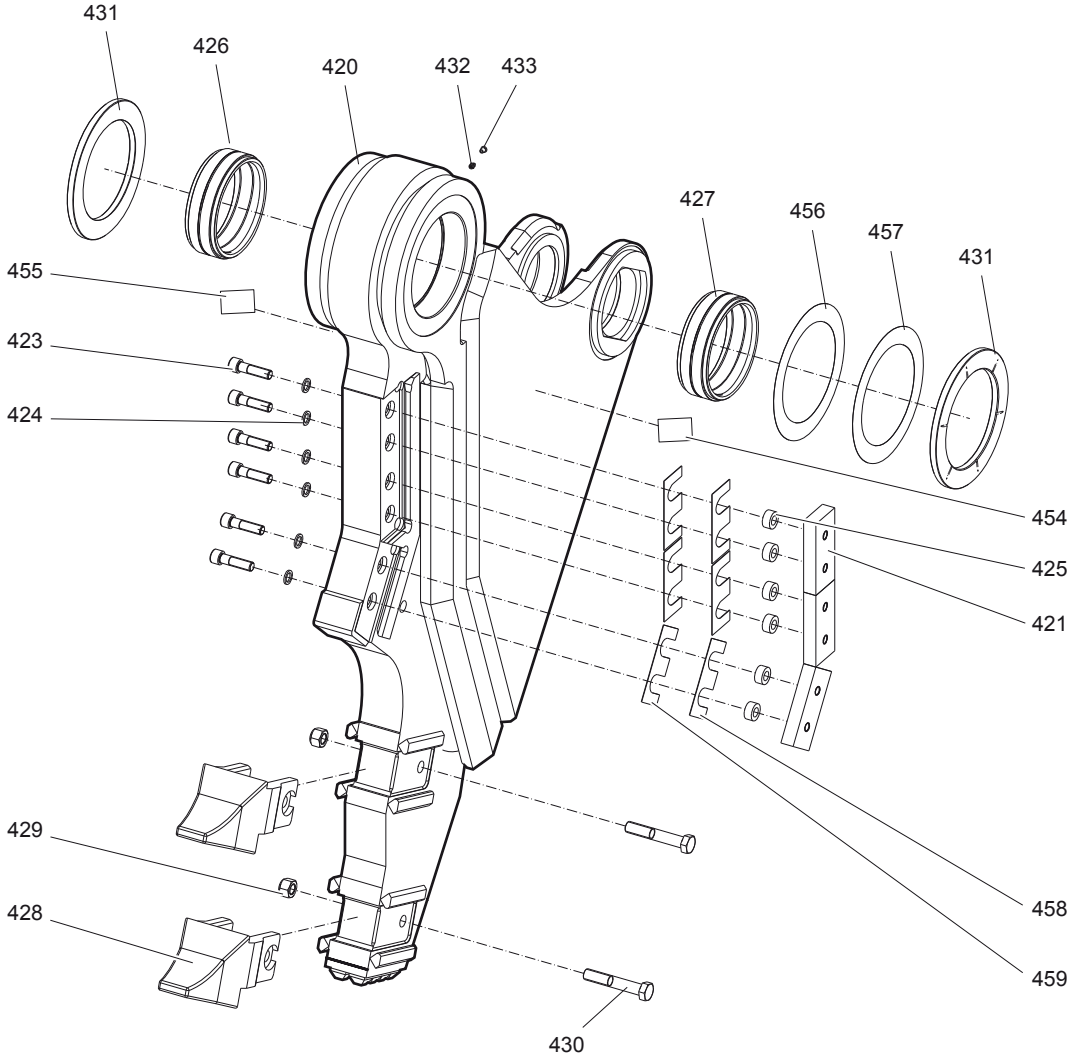

© 2013 Atlas Copco Construction Tools GmbH | No. 3390 7552 01 | 2013-04-05

No.	Description	Remark	Quantity	Part number
420	Cutter jaw (single) U		1	3363 1063 35
421	Cutter blade		3	3363 0864 79
423	Allen screw		6	3360 1060 98
424	Pair of lock washers		6	3361 8507 48
425	Lock ring		6	3363 0351 07
426	Bearing bush		1	3363 1099 57
427	Bearing bush		1	3363 1099 55
428	Tip of tooth	with no. 429 and 430	2	3363 0989 63
429	Hexagon nut		2	3363 0989 34
430	Hexagon head screw		2	3363 0664 13
431	Wear ring		2	3363 1099 65
432	Grease nipple		1	3360 2098 34
433	Cap		1	3363 0876 00
454	Label tightening torque	German/English	1	3362 2687 51
455	Label tightening torque	Spanish/French	1	3363 0667 50
456	Spacer ring	0.5 mm (0.02 in.) thick, as required	1	3363 1099 63
457	Spacer ring	0.2 mm (0.01 in.) thick, as required	1	3363 1099 61
458	Shim	0.2 mm (0.01 in.) thick, as required	3	3363 0881 49
459	Shim	1.0 mm (0.04 in.) thick, as required	3	3363 0876 07

Cutter jaw (double) U

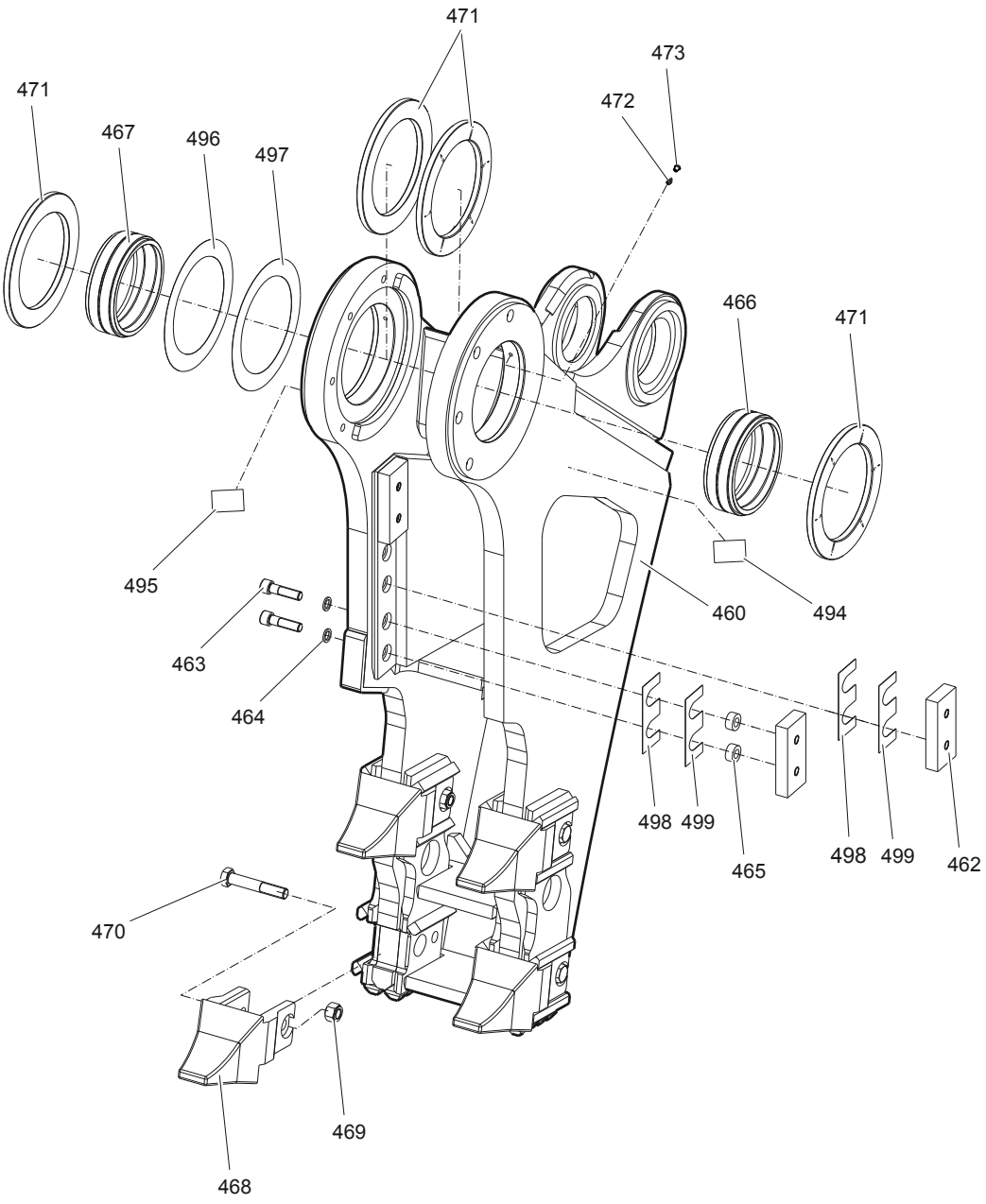

© 2013 Atlas Copco Construction Tools GmbH | No. 3390 7552 01 | 2013-04-05

No.	Description	Remark	Quantity	Part number
460	Cutter jaw (double) U		1	3363 1063 36
462	Cutter blade		3	3363 0864 79
463	Allen screw		6	3363 0700 85
464	Pair of lock washers		6	3361 8507 48
465	Lock ring		6	3363 0351 07
466	Bearing bush		1	3363 1099 57
467	Bearing bush		1	3363 1099 55
468	Tip of tooth	with no. 469 and 470	4	3363 0989 63
469	Hexagon nut		4	3363 0989 34
470	Hexagon head screw		4	3363 0664 13
471	Wear ring		4	3363 1099 65
472	Grease nipple		2	3360 2098 34
473	Cap		2	3363 0876 00
494	Label tightening torque	German/English	1	3362 2687 51
495	Label tightening torque	Spanish/French	1	3363 0667 50
496	Spacer ring	0.2 mm (0.01 in.) thick, as required	1	3363 1099 61
497	Spacer ring	0.5 mm (0.02 in.) thick, as required	1	3363 1099 63
498	Shim	0.2 mm (0.01 in.) thick, as required	3	3363 0881 49
499	Shim	1.0 mm (0.04 in.) thick, as required	3	3363 0876 07

Cutter jaw pair S complete

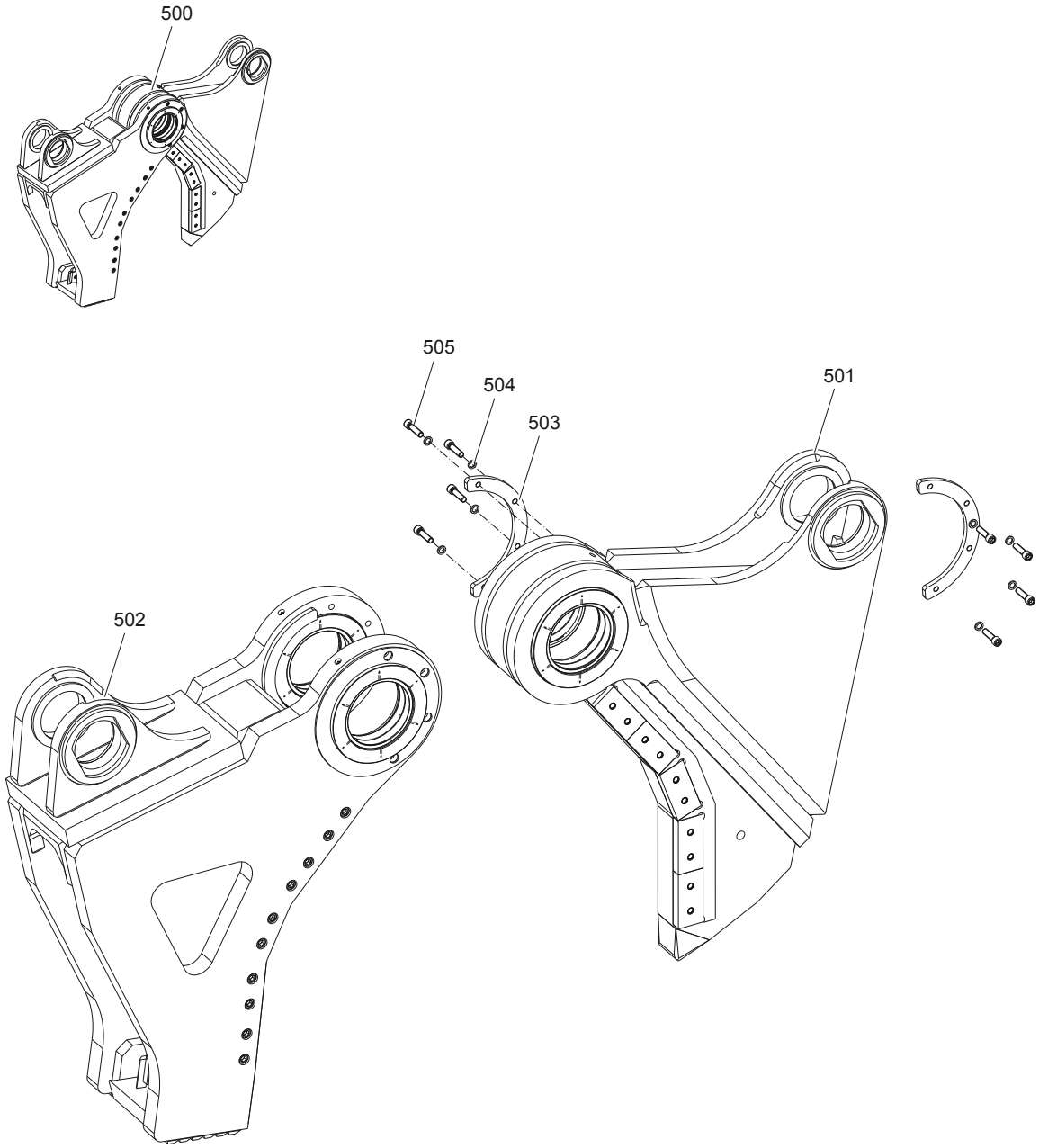

© 2013 Atlas Copco Construction Tools GmbH | No. 3390 7552 01 | 2013-04-05

No.	Description	Remark	Quantity	Part number
500	Cutter jaw pair S complete		1	3363 1063 41
501	Cutter jaw (single) S	see separate chapter	1	3363 1063 42
502	Cutter jaw (double) S	see separate chapter	1	3363 1063 43
503	Ring segment		2	3363 1099 59
504	Pair of lock washers		8	3361 3337 03
505	Allen screw		8	3360 0266 42

Cutter jaw (single) S

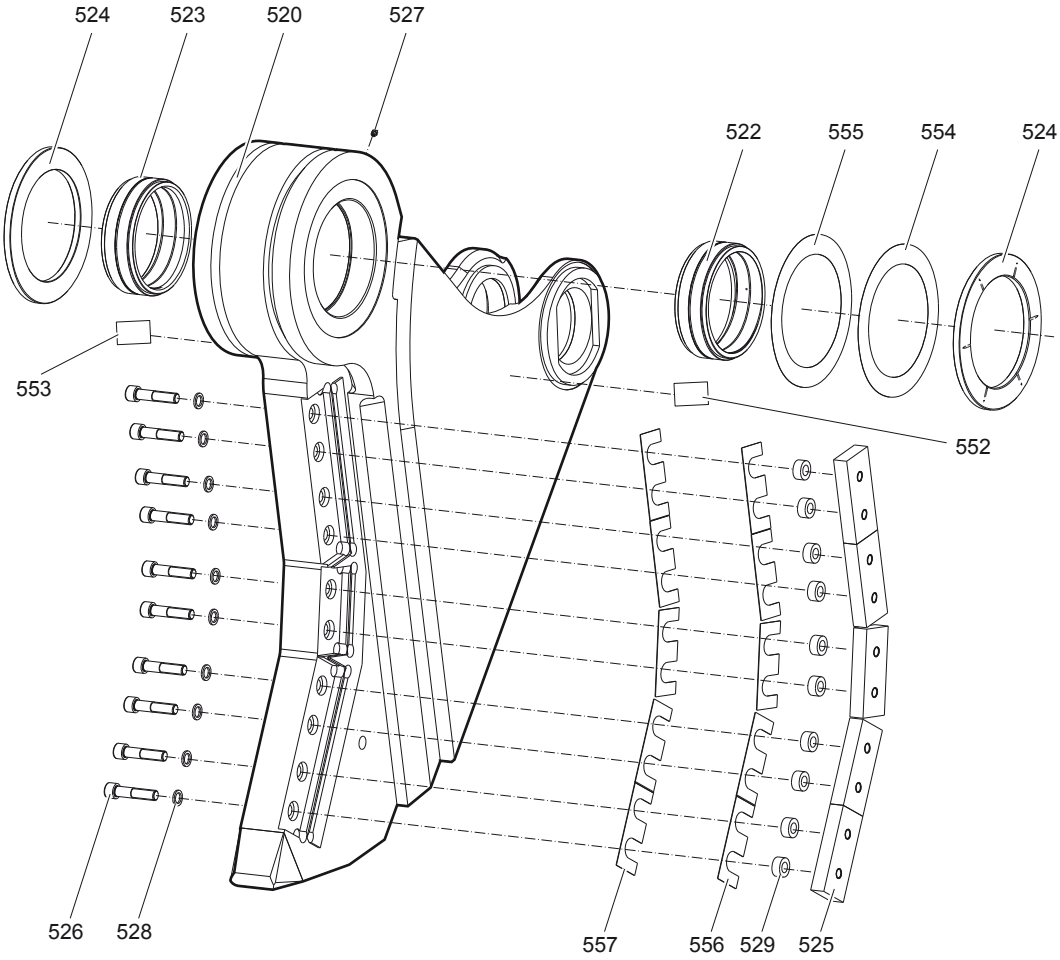

© 2013 Atlas Copco Construction Tools GmbH | No. 3390 7552 01 | 2013-04-05

No.	Description	Remark	Quantity	Part number
520	Cutter jaw (single) S		1	3363 1063 42
522	Bearing bush		1	3363 1099 55
523	Bearing bush		1	3363 1099 57
524	Wear ring		2	3363 1099 65
525	Cutter blade		5	3363 0864 79
526	Allen screw		10	3363 0700 85
527	Grease nipple		1	3360 2098 34
528	Pair of lock washers		10	3361 8507 48
529	Lock ring		10	3363 0351 07
552	Label tightening torque	German/English	1	3362 2687 51
553	Label tightening torque	Spanish/French	1	3363 0667 50
554	Spacer ring	0.2 mm (0.01 in.) thick, as required	1	3363 1099 61
555	Spacer ring	0.5 mm (0.02 in.) thick, as required	1	3363 1099 63
556	Shim	0.2 mm (0.01 in.) thick, as required	5	3363 0881 49
557	Shim	1.0 mm (0.04 in.) thick, as required	5	3363 0876 07

Cutter jaw (double) S

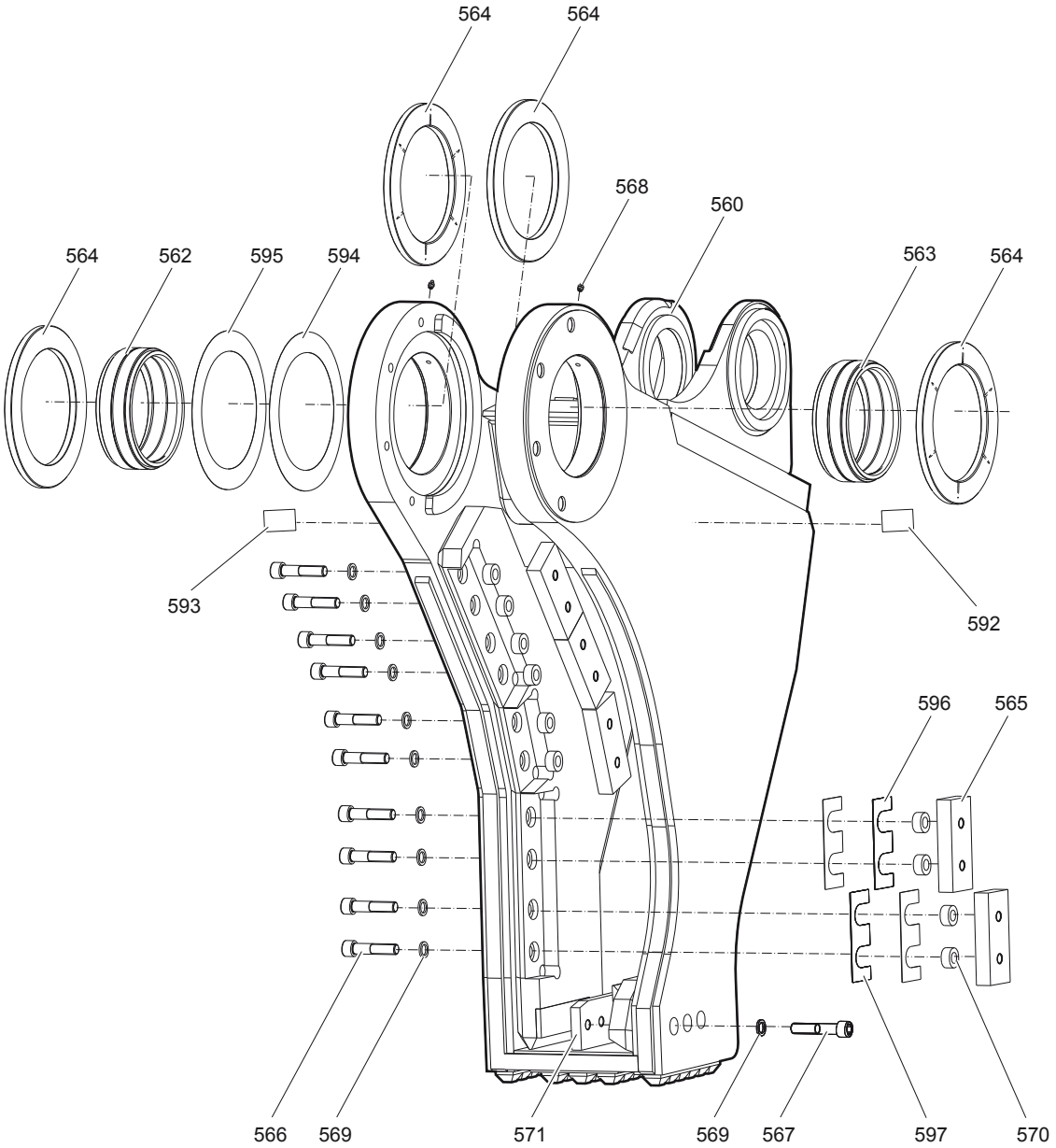

© 2013 Atlas Copco Construction Tools GmbH | No. 3390 7552 01 | 2013-04-05

No.	Description	Remark	Quantity	Part number
560	Cutter jaw (double) S		1	3363 1063 43
562	Bearing bush		1	3363 1099 55
563	Bearing bush		1	3363 1099 57
564	Wear ring		4	3363 1099 65
565	Cutter blade		5	3363 0864 79
566	Allen screw		10	3363 0700 85
567	Allen screw		3	3360 1060 99
568	Grease nipple		2	3360 2098 34
569	Pair of lock washers		13	3361 8507 48
570	Lock ring		10	3363 0351 07
571	Sliding plate		1	3363 0902 41
592	Label tightening torque	German/English	1	3362 2687 51
593	Label tightening torque	Spanish/French	1	3363 0667 50
594	Spacer ring	0.2 mm (0.01 in.) thick, as required	1	3363 1099 61
595	Spacer ring	0.5 mm (0.01 in.) thick, as required	1	3363 1099 63
596	Shim	0.2 mm (0.01 in.) thick, as required	5	3363 0881 49
597	Shim	1.0 mm (0.04 in.) thick, as required	5	3363 0876 07

Upper part complete

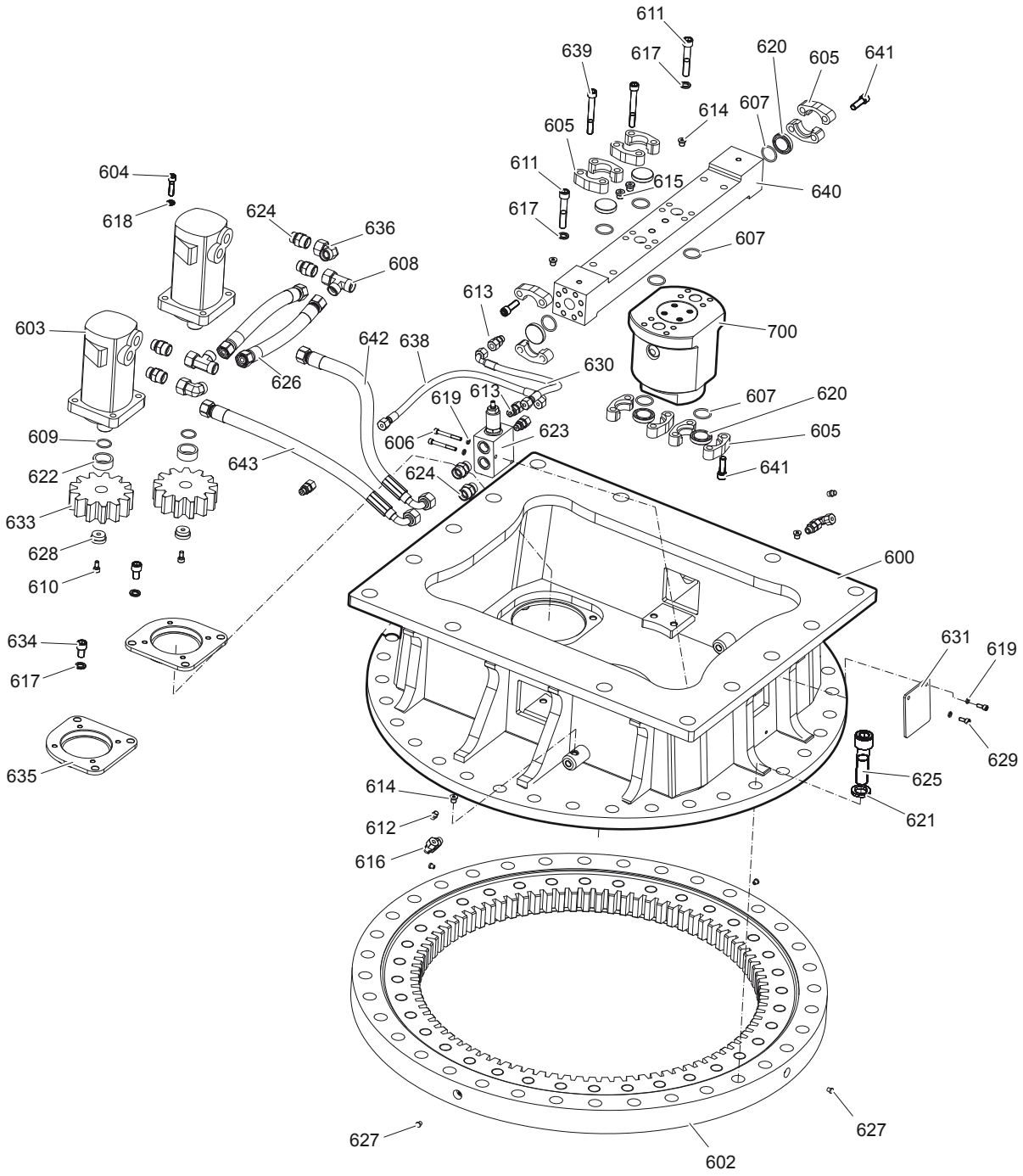

© 2013 Atlas Copco Construction Tools GmbH | No. 3390 7552 01 | 2013-04-05

No.	Description	Remark	Quantity	Part number
600	Upper part complete	with parts no. 602 to 700	1	3363 0971 07
602	Four point bearing		1	3363 0971 39
603	Hydraulic motor		2	3363 0989 67
604	Allen screw		8	3360 0265 13
605	Flange half		12	3360 9924 88
606	Allen screw		2	3360 1037 38
607	O-ring		8	3360 3143 72
608	Fitting		2	3363 1130 33
609	O-ring		2	3360 3133 04
610	Allen screw		2	3361 0319 81
611	Allen screw		4	3362 3280 96
612	Plug		2	3360 3145 93
613	Fitting		4	3360 4783 33
614	Threaded plug		4	3360 4784 39
615	Threaded plug		2	3360 4784 40
616	Fitting		2	3363 0919 12
617	Pair of lock washers		10	3361 3337 03
618	Pair of lock washers		8	3361 8505 96
619	Pair of lock washers		4	3361 8507 43
620	Blind plate		6	3363 0313 48
621	Pair of lock washers		32	3361 8507 48
622	O-ring		2	3362 2658 69
623	Valve block		1	3363 1134 37
624	Fitting		6	3363 1130 32
625			32	3360 1061 01
626	Hydraulic hose		2	3363 1130 42
627	Cap		4	3363 0876 00
628	O-ring		2	3363 0883 27
629	Allen screw		2	3363 0883 33
630	Hydraulic hose		1	3363 0839 72
631	Cover sheet		1	3363 0994 89
633	Spur pinion		2	3363 0995 97
634	Allen screw		6	3362 3281 13
635	Plate		2	3363 1099 41
636	Fitting		2	3363 1130 34
638	Hydraulic hose		1	3363 0858 85
639	Allen screw		8	3363 1054 85
640	Connection plate		1	3363 1054 95
641	Allen screw		16	3363 0342 74
642	Hydraulic hose		1	3363 1134 23
643	Hydraulic hose		1	3363 1134 22
700	Rotary transmission	see separate chapter	1	3363 1054 71

Rotary transmission

700						
701	702	703	704	705	706	**707**

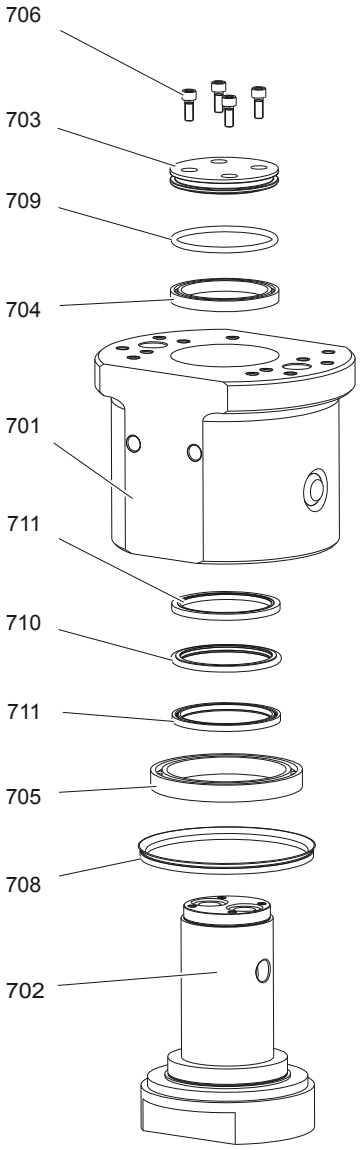

707			
708	709	710	711

© 2013 Atlas Copco Construction Tools GmbH | No. 3390 7552 01 | 2013-04-05

No.	Description	Remark	Quantity	Part number
700(701-706,707)	**Rotary transmission**		1	3363 1054 71
701	Stator		1	3363 1054 73
702	Rotor		1	3363 1054 77
703	Cap		1	3363 0343 18
704	Ball bearing		1	3363 0343 19
705	Ball bearing		1	3363 0343 20
706	Allen screw		4	3363 0343 25
707(708-711)	**Seal kit**		1	3363 0830 66
708	V-ring		1	-
709	O-ring		1	-
710	Slide ring		1	-
711	Seal		2	-

Tightening torques

No.	Description	Tightening torque	Remark
29	Allen screw	170 + 15 Nm	
30	Allen screw	1850 + 50 Nm	
31	Allen screw	204 + 20 Nm	
32	Allen screw	90 + 9 Nm	
33	Allen screw	90 + 9 Nm	
404	Allen screw	190 + 5 Nm	
423	Allen screw	530 + 30 Nm	
430	Allen screw	920 + 30 Nm	
463	Allen screw	530 + 30 Nm	
470	Allen screw	920 + 30 Nm	
505	Allen screw	190 + 5 Nm	
526	Allen screw	530 + 30 Nm	
566	Allen screw	530 + 30 Nm	
567	Allen screw	530 + 30 Nm	
604	Allen screw	90 + 9 Nm	
606	Allen screw	31 + 5 Nm	
610	Allen screw	70 + 30 Nm	fix with Loctite 243
611	Allen screw	255 + 30 Nm	
613	Fitting	70 + 7 Nm	
624	Fitting	70 + 7 Nm	
625	Allen screw	1850 + 50 Nm	
634	Allen screw	180 + 20 Nm	
639	Allen screw	170 + 15 Nm	
641	Allen screw	170 + 15 Nm	

© 2013 Atlas Copco Construction Tools GmbH | No. 3390 7552 01 | 2013-04-05

Accessories

Hydraulic hoses

Open - Close

Description	Remark	Quantity	Part number
Hydraulic Hose	I.D. 32 (1.26 in.) flange SAE 90° 1 1/4 in. - 6000 PSI, 1 5/8 in. JIC length 2800 mm (110 in.)	2	3363 1064 93
Hydraulic Hose	I.D. 32 (1.26 in.) flange SAE 90° 1 1/4 in. - 6000 PSI, 1 5/8 in. JIC length 3500 mm (138 in.)	2	3363 1064 94

Rotation

Description	Remark	Quantity	Part number
Hydraulic Hose	I.D. 8 (3/8 in.) both ends M 20x1.5, conical seal 24°, length 2800 mm (110 in.)	2	3363 0317 67
Hydraulic Hose	I.D. 8 (3/8 in.) both ends M 20x1.5, conical seal 24°, length 3500 mm (138 in.)	2	3363 0343 99

Optional equipment

Description	Remark	Quantity	Part number
Cutter grease cartridge	12 x 400 g (0.88 lbs)	1	3363 0949 14
Grease gun		1	0909 1071 00
Adapter plate matching the carrier	Consult the Atlas Copco Customer Center/Dealer in your area.	1	-
Base plate with threaded inserts		1	3363 1047 27
Bolt kit		1	3363 0873 07
Base plate with through borings		1	3363 1047 25
Bolt kit		1	3363 0945 80
Allen key	27 mm for bolt kit	1	3360 4789 49
Assembly rack	for cutter jaw set	1	3363 1119 89
Bolt cage	for bolt no. 4	1	3363 1063 09

Kits

Label kit

No.	Description	Remark	Quantity	Part number
	Label kit		1	3363 1063 46

Hoses (casing) kit

No.	Description	Remark	Quantity	Part number
	Hose (casing) kit		1	3363 1063 47
18	Hydraulic hose		1	3363 1099 36
19	Hydraulic hose		1	3363 1099 33
20	Hydraulic hose		2	3363 1099 32
21	Hydraulic hose		2	3363 1099 34
22	O-ring		6	3360 3143 70
25	O-ring		6	3360 3143 72
29	Allen screw		24	3363 0342 74
32	Allen screw		24	3360 0265 13

Cutter blades kit U

No.	Description	Remark	Quantity	Part number
	Cutter blades kit		1	3363 1123 62
421	Cutter blade		3	3363 0864 79
423	Allen screw		6	3360 1060 98
424	Pair of lock washers		6	3361 8507 48
425	Lock ring		6	3363 0351 07
458	Shim	0.2 mm (0.01 in.) thick, as required	3	3363 0881 49
459	Shim	1.0 mm (0.04 in.) thick, as required	3	3363 0876 07
462	Cutter blade		3	3363 0864 79
463	Allen screw		6	3363 0700 85
464	Pair of lock washers		6	3361 8507 48
465	Lock ring		6	3363 0351 07
498	Shim	0.2 mm (0.01 in.) thick, as required	3	3363 0881 49
499	Shim	1.0 mm (0.04 in.) thick, as required	3	3363 0876 07

© 2013 Atlas Copco Construction Tools GmbH | No. 3390 7552 01 | 2013-04-05

Cutter blades kit S

No.	Description	Remark	Quantity	Part number
	Cutter blades kit		1	3363 1120 51
525	Cutter blade		5	3363 0864 79
526	Allen screw		10	3363 0700 85
528	Pair of lock washers		10	3361 8507 48
529	Lock ring		10	3363 0351 07
556	Shim	0.2 mm (0.01 in.) thick, as required	5	3363 0881 49
557	Shim	1.0 mm (0.04 in.) thick, as required	5	3363 0876 07
565	Cutter blade		5	3363 0864 79
566	Allen screw		10	3363 0700 85
569	Pair of lock washers		10	3361 8507 48
570	Lock ring		10	3363 0351 07
596	Shim	0.2 mm (0.01 in.) thick, as required	5	3363 0881 49
597	Shim	1.0 mm (0.04 in.) thick, as required	5	3363 0876 07

Tip of tooth kit

No.	Description	Remark	Quantity	Part number
	Tip of tooth kit		1	3363 1036 19
428	Tip of tooth	with no. 429 and 430	2	3363 0989 22
429	Hexagon nut		2	3363 0989 34
430	Hexagon head screw		2	3363 0664 13
468	Tip of tooth	with no. 469 and 470	4	3363 0989 22
469	Hexagon nut		4	3363 0989 34
470	Hexagon head screw		4	3363 0664 13

Sliding plate kit

No.	Description	Remark	Quantity	Part number
	Sliding plate kit		1	3363 1036 48
567	Allen screw		3	3360 1061 00
569	Pair of lock washers		3	3361 8507 48
571	Sliding plate		1	3363 0902 41

Seal kit (Hydraulic cylinder)

No.	Description	Remark	Quantity	Part number
	Seal kit (Hydraulic cylinder)		1	3363 1036 98
221	Wiper		1	-
222	Seal		1	-
223	Seal		1	-
224	Guide ring		3	-
225	Seal		1	-
226	Back-up ring		1	-
227	Seal		1	-
228	Guide ring		2	-

Seal kit (Hydraulic motor housing)

No.	Description	Remark	Quantity	Part number
	Seal kit (Hydraulic motor housing)		1	3363 0839 45

Seal kit (Hydraulic motor)

No.	Description	Remark	Quantity	Part number
	Seal kit (Hydraulic motor)		1	3363 0830 74

Seal kit for rapid movement valve

No.	Description	Remark	Quantity	Part number
	Seal kit		1	3363 1063 14

© 2013 Atlas Copco Construction Tools GmbH | No. 3390 7552 01 | 2013-04-05

Dimensions

Dimensions CC 4700 U

mm (in.)

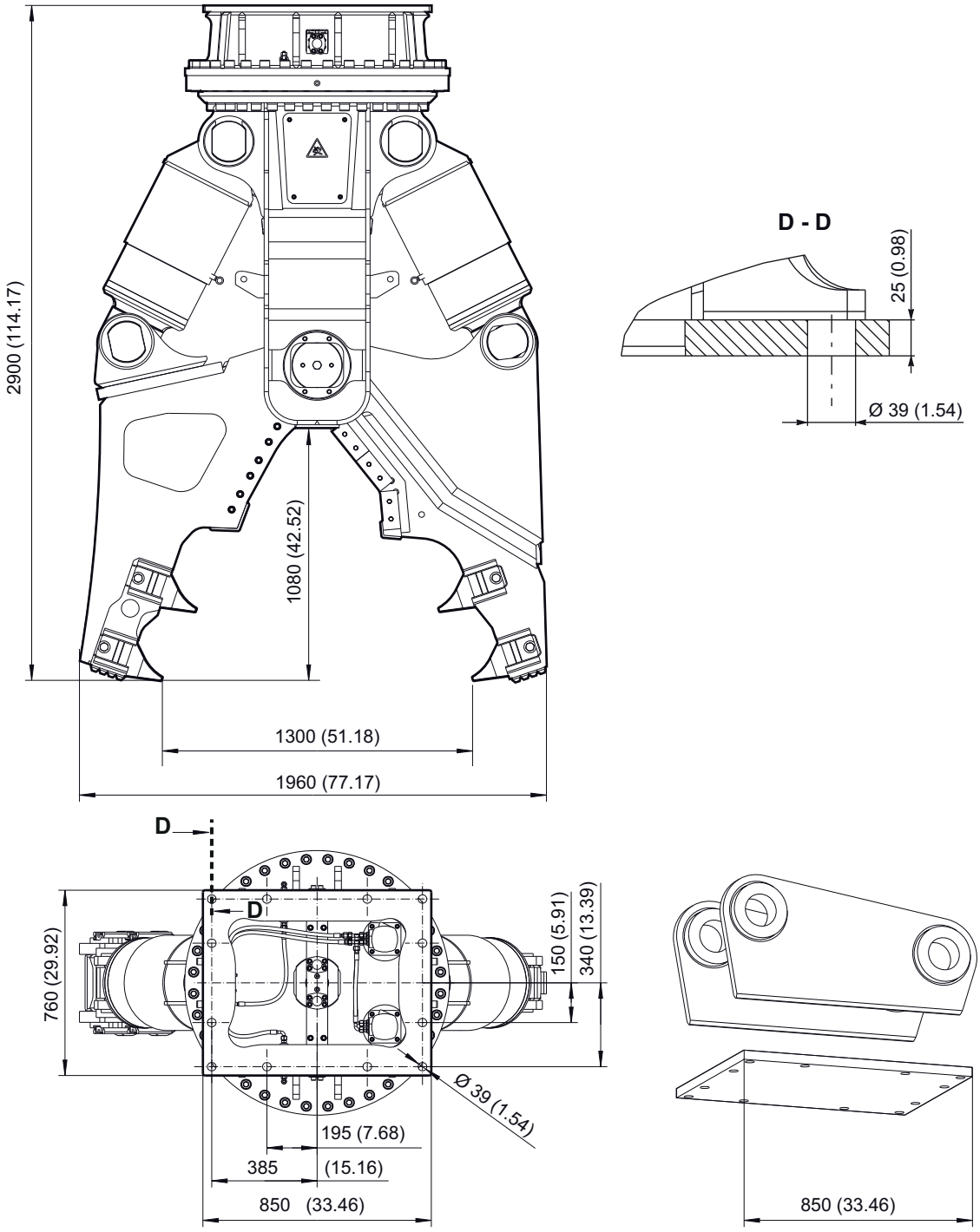

Dimensions CC 4700 S

mm (in.)

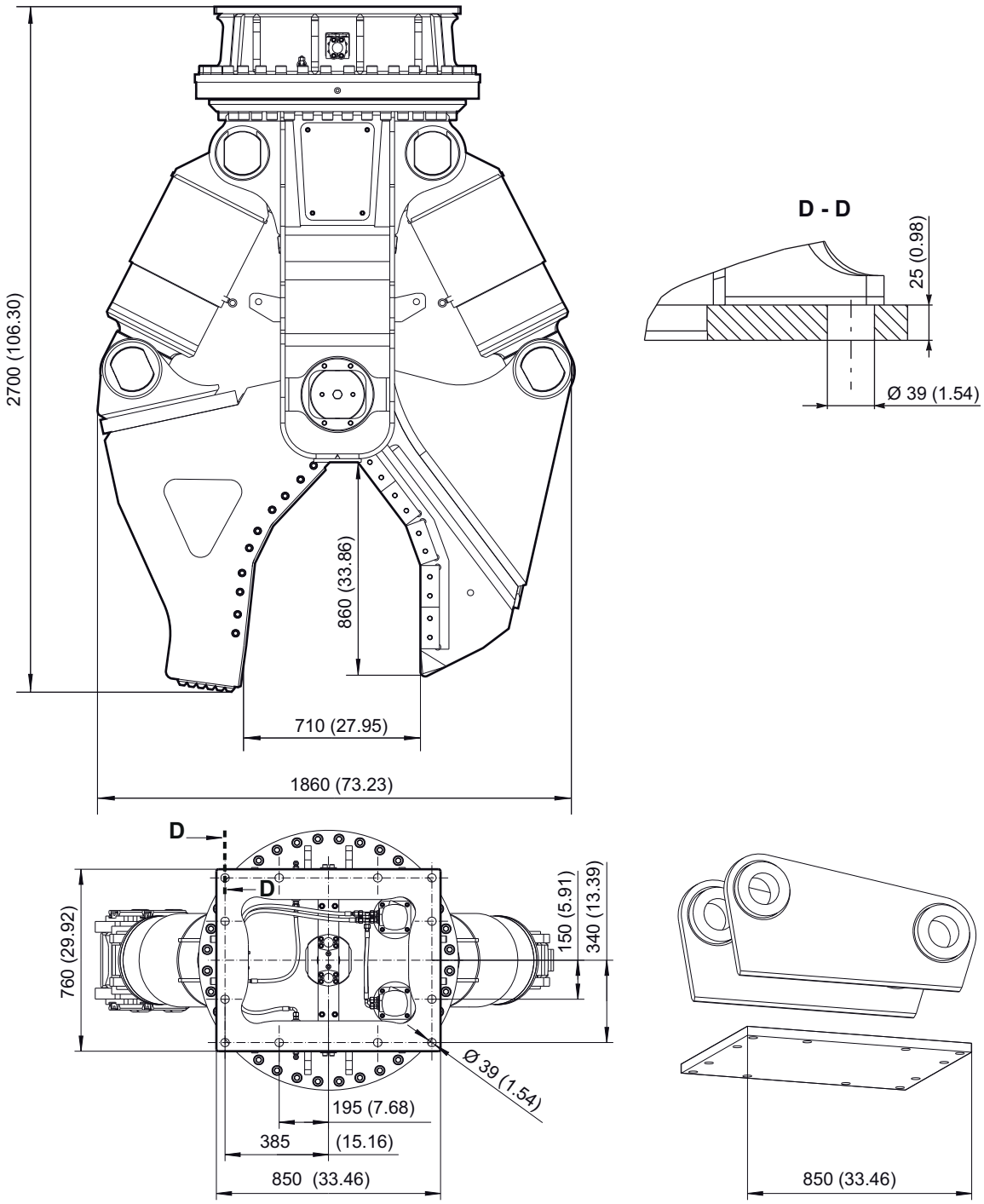

© 2013 Atlas Copco Construction Tools GmbH | No. 3390 7552 01 | 2013-04-05

Any unauthorized use or copying of the contents or any part thereof is prohibited. This applies in particular to trademarks, model denominations, part numbers, and drawings.

© 2013 Atlas Copco Construction Tools GmbH | No. 3390 7552 01 | 2013-04-05

Atlas Copco

www.atlascopco.com